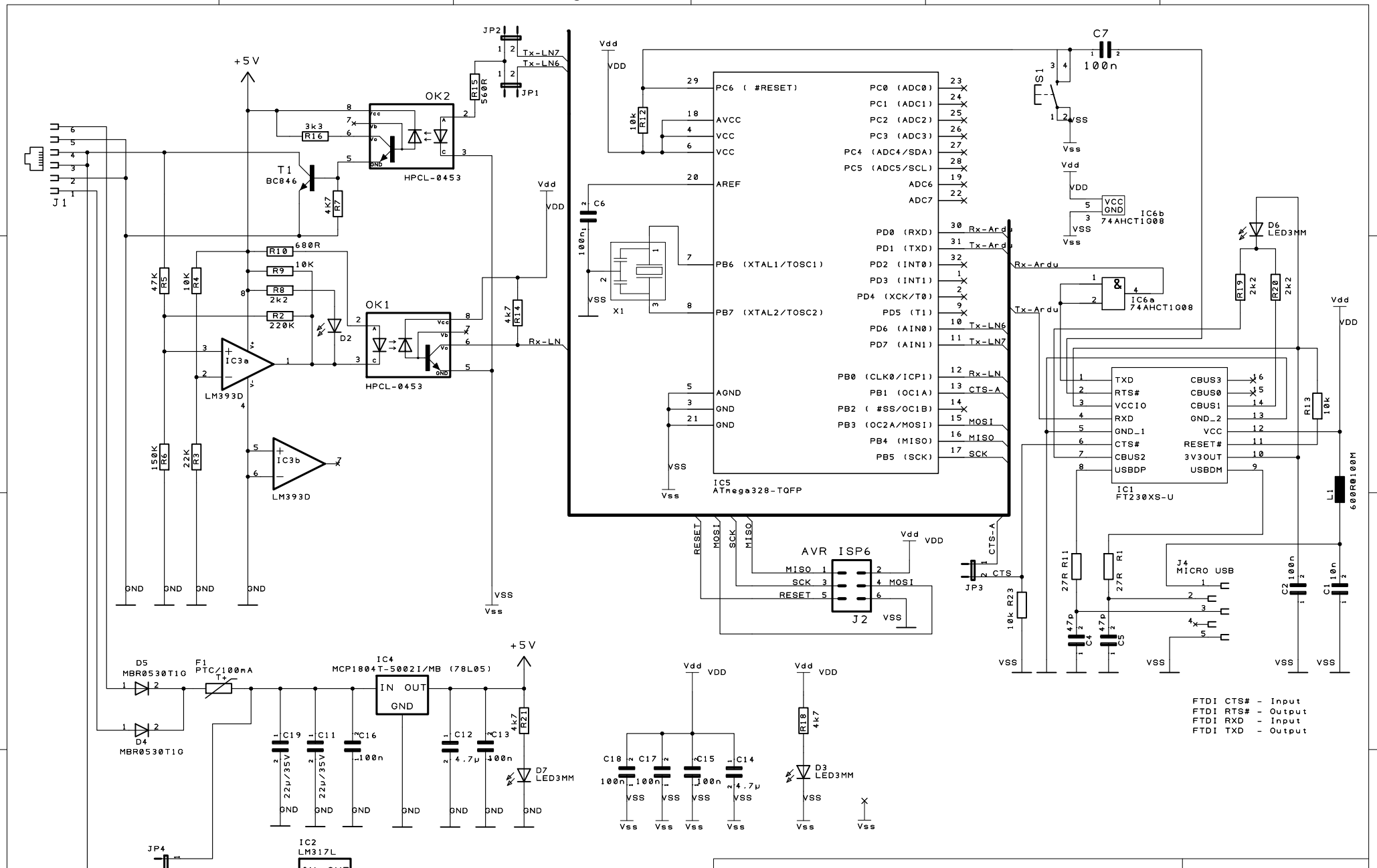
A
B
C
D
E
F
1
2
3
4
+5V
J1
JP2
JP1
Tx-LN7
Tx-LN6
R15
560R
OK2
HPCL-0453
3k3
R16
T1
BC846
4k7
R7
680R
R10
10K
R9
2k2
R8
220K
R2
D2
47K
R5
10K
R4
150K
R6
22K
R3
IC3a
LM393D
IC3b
LM393D
OK1
HPCL-0453
4k7
R14
Rx-LN
GND
VSS
Vss
Vdd
VDD
C7
100n
S1
IC6b
74AHCT1G08
IC6a
74AHCT1G08
10k
R12
C6
100n
X1
IC5
ATmega328-TQFP
PC6 (#RESET)
AVCC
VCC
AREF
PB6 (XTAL1/TOSC1)
PB7 (XTAL2/TOSC2)
AGND
PC0 (ADC0)
PC1 (ADC1)
PC2 (ADC2)
PC3 (ADC3)
PC4 (ADC4/SDA)
PC5 (ADC5/SCL)
ADC6
ADC7
PD0 (RXD)
PD1 (TXD)
PD2 (INT0)
PD3 (INT1)
PD4 (XCK/T0)
PD5 (T1)
PD6 (AIN0)
PD7 (AIN1)
PB0 (CLK0/ICP1)
PB1 (OC1A)
PB2 (#SS/OC1B)
PB3 (OC2A/MOSI)
PB4 (MISO)
PB5 (SCK)
Rx-Ardu
Tx-Ardu
Tx-LN6
Tx-LN7
Rx-LN
CTS-A
MOSI
MISO
SCK
RESET
AVR ISP6
J2
JP3
CTS
10k R23
IC1
FT230XS-U
TXD
RTS#
VCCIO
RXD
GND_1
CTS#
CBUS2
USBDP
CBUS3
CBUS0
CBUS1
GND_2
VCC
RESET#
3V3OUT
USBDM
27R R11
27R R1
47p
C4
47p
C5
J4
MICRO USB
D6
LED3MM
R19
2k2
R20
2k2
R13
10k
L1
600R@100M
C2
100n
C1
10n
D5
MBR0530T1G
D4
MBR0530T1G
F1
PTC/100mA
IC4
MCP1804T-5002I/MB (78L05)
IN OUT
GND
C19
22µ/35V
C11
22µ/35V
C16
100n
C12
4.7µ
C13
100n
4k7
R21
D7
LED3MM
C18
100n
C17
100n
C15
100n
C14
4.7µ
R18
4k7
D3
LED3MM
JP4
IC2
LM317L
IN OUT
ADJ
82R
R22
FTDI CTS# - Input
FTDI RTS# - Output
FTDI RXD - Input
FTDI TXD - Output
PROJECT: LocoBuffer with ATmega328
DRAWING TITLE: LocoBuffer-ProMini SMD
DRAWN BY: Michael Hochmuth
REVISION: 2.2
SHEET: OF
STATUS:
DATE: 17.08.2026
Sim&IT